Lattice chiral gauge symmetry via non-Abelian bosonization

Soma Onoda
Kyushu University

New Frontiers in QCD 2026
YITP, Kyoto University
2026/11/12

- Based on [SO, arXiv:2606.12358]

Chiral gauge theories on the lattice?

- Lattice gauge theory provides a non-perturbative regularization with **exact gauge invariance**, as in **lattice QCD**.
- Unlike QCD, the **Standard Model** contains chiral gauge interactions: left- and right-handed fermions couple differently.

$$S_F = \int \mathrm{d}^d x \left[\bar{\psi}_L \mathrm{i} \not{D}_L \psi_L + \bar{\psi}_R \mathrm{i} \not{D}_R \psi_R + \cdots \right], \qquad t_L^a \neq t_R^a.$$

- A gauge-invariant regulator is needed for studying the **non-perturbative dynamics** of chiral gauge theories.

How can we regularize anomaly-free chiral gauge theories non-perturbatively?

Difficulty: chiral fermions on the lattice

Nielsen–Ninomiya: Under standard assumptions, **locality**, **naive chirality** and **no doublers** are incompatible. [Nielsen–Ninomiya '81]

Ginsparg–Wilson: Exact **modified chirality** without doubling:

$$\{D, \gamma_5\} = aD\gamma_5 D.$$

Weyl-fermion measure: For anomaly-free matter, construct a smooth, gauge-invariant measure on the lattice.

Central challenge: Can the gauge-anomaly structure and its cancellation mechanism be reproduced on the lattice?

Progress: Lüscher's $U(1)$ construction; recent **non-Abelian** advances, including the Standard Model.

[Lüscher '99; Craig '26 (overlap); Hsu/Witten '26 (interpolation)]

This talk: A different route via 2D bosonization, without directly constructing a Weyl-fermion measure.

Strategy in 2D: bosonization

In **2D**, bosonization gives a dual description of chiral fermions with the same chiral-symmetry and anomaly structure.

Strategy. Bosonize in the continuum, then discretize the bosonic counterpart.

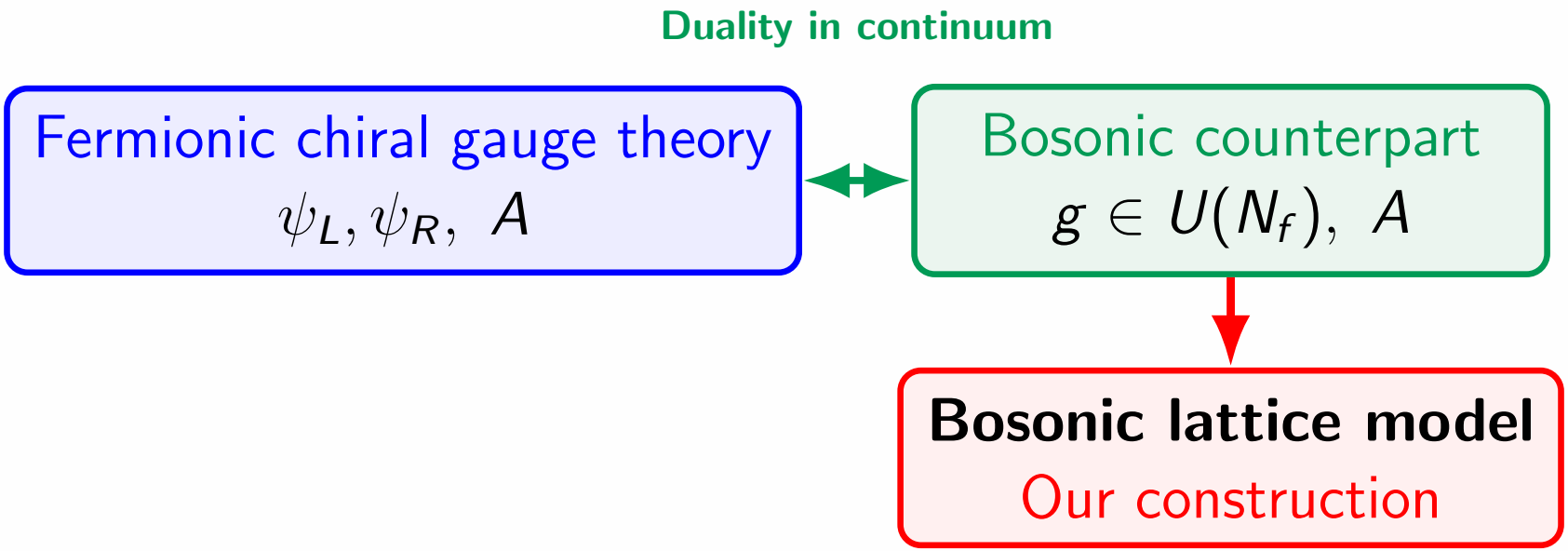

Advantages of Bosonization-Based Approaches

- Lattice bosonic models can realize the same **chiral symmetries as in the continuum** exactly with an **ultra-local action**.

  cf. [Baig–Chen–Cherman–Neuzil'26]

- The gauge anomaly is encoded in the **bosonic action**, rather than the fermion measure, and can be computed straightforwardly.

Recent progress in 2D $U(1)$ chiral gauge theories

[Berkowitz–Cherman–Jacobson'23], [DeMarco–Lake–Wen'23], [Morikawa–SO–Suzuki'24], [Thorngren–Preskill–Fidkowski'26], [Seifnashri'26], [Lu–Shao'26]...

This work

We extend this strategy to 2D $SU(N)$ chiral gauge theories.
We reproduce the **exact anomaly cancellation mechanism** at finite lattice spacing, realizing **exact chiral gauge invariance**.

Non-Abelian bosonization: symmetry dictionary

In 2D, N_f-flavor free massless Dirac fermions are dual to the level-1 $U(N_f)$ WZW model. [Witten '83]

$$\Psi_L \longmapsto V_L \Psi_L, \qquad \Psi_R \longmapsto V_R \Psi_R,$$
$$g_{ij} \sim (\Psi_L)_i (\bar{\Psi}_R)_j \quad \Longrightarrow \quad g \longmapsto V_L \, g \, V_R^\dagger.$$

$$S_{\mathrm{WZW}}[g] = \frac{1}{8\pi} \int_{M_2} \mathrm{d}^2 x \ \mathrm{Tr}(\partial_\mu g^\dagger \partial_\mu g) + \frac{\mathrm{i}}{12\pi} \int_{M_3} \mathrm{Tr}(g^{-1}\mathrm{d}g)^3.$$

The exponentiated WZ term is independent of the choice of bulk extension M_3 with $\partial M_3 = M_2$.

Continuum: anomaly inflow and cancellation

Fermionic side: $A^{L/R} = A^a t^a_{L/R}$.

$$S_F = \int_{M_2} \mathrm{d}^2x \left(\bar{\Psi}_L \mathrm{i}\not{D}_L \Psi_L + \bar{\Psi}_R \mathrm{i}\not{D}_R \Psi_R\right).$$

Bosonic side: $Dg = \mathrm{d}g - \mathrm{i}A_L g + \mathrm{i}gA_R$. The gauged WZW action describes the gauge anomaly via anomaly inflow:

$$S_{\mathrm{gWZW}} = S_{\mathrm{WZW}}[g] + B_{M_2}[g, A] + \left(\mathrm{CS}[A_R] - \mathrm{CS}[A_L]\right).$$

where $B_{M_2}[g, A]$ contains 2D gauge couplings, and CS is on M_3.

$$\mathrm{Tr}(t^a_L t^b_L) - \mathrm{Tr}(t^a_R t^b_R) = 0 \implies \mathrm{CS}[A_R] - \mathrm{CS}[A_L] = 0.$$

Lattice goal. Reproduce this anomaly-cancellation structure at finite cut-off a. The bulk dependence is in the Chern–Simons terms, so we start with their lattice counterpart.

Seiberg's lattice Chern–Simons term

A local contribution is assigned to every 3D cube c: [Seiberg'84]

$$K_c[U] = \frac{1}{12\pi}\int_c \mathrm{Tr}\left[(S_c\,\mathrm{d}S_c^{-1})^3\right] + \frac{1}{4\pi}\sum_{p\subset\partial c}\int_p \mathrm{Tr}\left[P_p^{-1}\mathrm{d}P_p\,S_c^{-1}\mathrm{d}S_c\right].$$

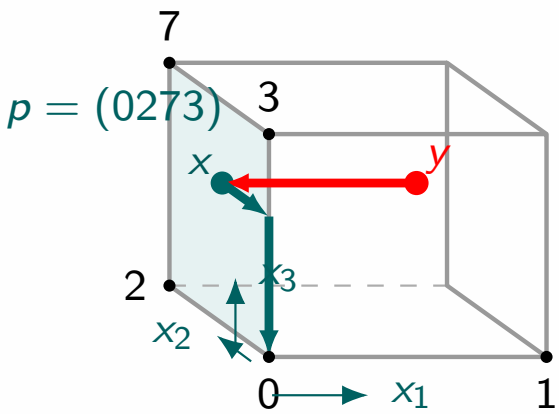

$S_c(y)$: interpolated Wilson line in the **cube**, $y = (x_1, x_2, x_3)$.

$P_p(x)$: interpolated Wilson line on the **face**, $x = (0, x_2, x_3)$.

$S_c(0, x_2, x_3) = P_{(0273)}(x_2, x_3)$.

E.g. $S_c(0, x_2, x_3) = U_{03}^{x_3}\left[U_{03}^{-x_3}\left(U_{03}\,U_{37}\,U_{72}\,U_{20}\right)^{x_3}U_{02}\;U_{27}^{x_3}\right]^{x_2}$

In the classical continuum limit, $\mathrm{i}\sum_c K_c[U] \to -\mathrm{CS}_{M_3}[A]$**.**

[Seiberg'84], [Lüscher'81], [Laursen'92]

Technical difficulty: fractional powers

The interpolation uses $U^s = \exp(s \log U)$. The principal logarithm is singular at eigenvalue -1.
On any $SU(2)$ **gauge orbit**, choose $V(n) = -U_{nm}^{-1}$ and $V(m) = \mathbf{1}$:

$$U'_{nm} = V(n) U_{nm} V(m)^{-1} = -\mathbf{1}.$$

For even N, $-\mathbf{1} \in SU(N)$. For odd $N \geq 3$, $\mathrm{diag}(-1, -1, 1, \ldots, 1)$ works as the target link.

A gauge transformation can make a **bare-link** power $(U_{nm})^s$ singular.

Our strategy: Introduce two bosonic fields on sites, $g_1(n)$ and $g_2(n)$, with **one-sided gauge transformations** $g_1 \to V_L g_1$ and $g_2 \to g_2 V_R^\dagger$, to make the matrices inside the fractional powers gauge invariant. After that, **we will denote them as the WZW fields.**

Dressing the interpolated Wilson lines

Bare interpolation on the face (0273):

$$S_c(0, x_2, x_3) = U_{03}^{x_3}\left[U_{03}^{-x_3}\left(U_{03}U_{37}U_{72}U_{20}\right)^{x_3}U_{02}U_{27}^{x_3}\right]^{x_2}.$$

Dressed interpolation using g_1 (gauge invariant):

$$\begin{aligned} S_c^L(0, x_2, x_3; g_1) = \left(g_1(0)^\dagger U_{03}^L g_1(3)\right)^{x_3}\Big[&\left(g_1(0)^\dagger U_{03}^L g_1(3)\right)^{-x_3} \\ &\times g_1(0)^\dagger R_L[\left(U_{03}U_{37}U_{72}U_{20}\right)^{x_3}]\, U_{02}^L g_1(2) \\ &\times \left(g_1(2)^\dagger U_{27}^L g_1(7)\right)^{x_3}\Big]^{x_2}. \end{aligned}$$

Gauge-invariant smoothness conditions (sufficiently small ϵ, δ):

$$\begin{aligned} &\|1 - g_1(n)^\dagger U_{nm}^L g_1(m)\| < \epsilon, \\ &\|1 - g_2(n) U_{nm}^R g_2(m)^\dagger\| < \epsilon, \qquad \|1 - U_p\| < \delta. \end{aligned}$$

Then no matrix inside a fractional power has eigenvalue -1.

Our lattice action and classical continuum limit

The site fields are $g_{1,2}(n) \in U(N_f)$. On links, $U_{nm} \in SU(N)$ and $U^{L/R}_{nm} = R_{L/R}(U_{nm})$. $m = n + \hat{\mu}$

$$D^L_\mu g_1(n) = U^L_{nm} g_1(m) - g_1(n), \quad D^R_\mu g_2(n) = g_2(m) U^R_{mn} - g_2(n).$$

$$S_{\rm lat} = \frac{1}{4\lambda^2} \sum_{n\in\Lambda_2,\mu} \mathrm{Tr}\left[(D^L_\mu g_1)^\dagger D^L_\mu g_1 + (D^R_\mu g_2)^\dagger D^R_\mu g_2\right] + \mathrm{i} \sum_{c\subset\Lambda_3} \left(K^L_c[g_1, U] - K^R_c[g_2^\dagger, U]\right).$$

$$S_{\rm lat} \longrightarrow \frac{1}{4\lambda^2} \int_{M_2} \mathrm{d}^2x\, \mathrm{Tr}\left(|D^L g_1|^2 + |D^R g_2|^2\right) + \frac{\mathrm{i}}{12\pi} \int_{M_3} \mathrm{Tr}(g_1^{-1}\mathrm{d}g_1)^3 + \frac{\mathrm{i}}{12\pi} \int_{M_3} \mathrm{Tr}(g_2^{-1}\mathrm{d}g_2)^3 + S_\partial[g_1, g_2, A] + \mathrm{CS}[A_R] - \mathrm{CS}[A_L].$$

At the bosonization point, $1/(4\lambda_*^2) = 1/(8\pi)$ ($\lambda_*^2 = 2\pi$). **What is their fermionic counterpart?**

"Spectators" appear

At the bosonization point, the **previous bosonic action** corresponds to the original chiral gauge theory plus **free, gauge-neutral "spectators"** χ:

$$S_{\text{orig+sp}} = \int_{M_2} \mathrm{d}^2x \left(\bar{\psi}_L \mathrm{i}\not{D}_L \psi_L + \bar{\psi}_R \mathrm{i}\not{D}_R \psi_R\right) + \int_{M_2} \mathrm{d}^2x \left(\bar{\chi}_L \mathrm{i}\not{\partial} \chi_L + \bar{\chi}_R \mathrm{i}\not{\partial} \chi_R\right).$$

Since χ **decouples**, original-sector normalized correlators agree:

$$Z_{\text{orig+sp}}[A] = Z_{\text{orig}}[A]\, Z_{\text{sp}},$$
$$\langle \mathcal{O}[\psi, A] \rangle_{\text{orig+sp}} = \langle \mathcal{O}[\psi, A] \rangle_{\text{orig}} \qquad (Z_{\text{sp}} \neq 0).$$

In this sense, spectators χ do not change the original theory.

Anomaly cancellation on the lattice

$$S_{\text{lat}} = (\text{kinetic term}) + \mathrm{i} \sum_{c \subset \Lambda_3} \left(K_c^L[g_1, U] - K_c^R[g_2^\dagger, U] \right)$$

The bulk terms can be decomposed (mod 2π) as:

$$\sum_{c \subset \Lambda_3} (K_c^L - K_c^R) \equiv \underbrace{B_\partial - (\text{WZ terms})}_{\text{depend only on boundary data}} + \underbrace{\mathcal{C}^L[U] - \mathcal{C}^R[U]}_{\text{bulk depend term} \sim \text{anomaly}} .$$

$$\mathcal{C}^L[U] - \mathcal{C}^R[U] = \sum_{a,b} \mathcal{B}^{ab}[U] \left[\mathrm{Tr}(t_L^a t_L^b) - \mathrm{Tr}(t_R^a t_R^b) \right] .$$

Main result

When $\mathrm{Tr}(t_L^a t_L^b) - \mathrm{Tr}(t_R^a t_R^b) = 0$, the bulk terms cancel exactly at finite lattice spacing. Then $e^{-S_{\text{lat}}}$ depends only on Λ_2 and realizes $2D$ **chiral gauge invariance**.

Summary and outlook

Central question: Can the gauge-anomaly structure and its cancellation mechanism be reproduced on the lattice?

- **Our construction:** Extend the 2D bosonization-based approach to 2D $SU(N)$.
- **Our answer:** For anomaly-free matter, the bulk contribution cancels exactly at finite lattice spacing, yielding a gauge-invariant 2D boundary theory.

Open question: Does the lattice bosonic model flow to the desired fermionic universality class?

Outlook:

- Numerical studies (tensor network?).
- "Spectator-free" lattice formulation of the **general gauged WZW term** (single g) — in preparation.

Backup: cube and face coordinates

A cube is parametrized by $x = (x_1, x_2, x_3) \in [0,1]^3$. The eight vertices are labeled as in our construction.

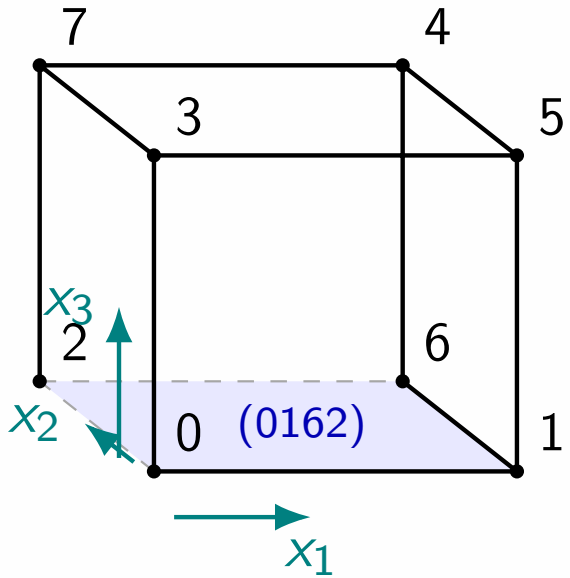

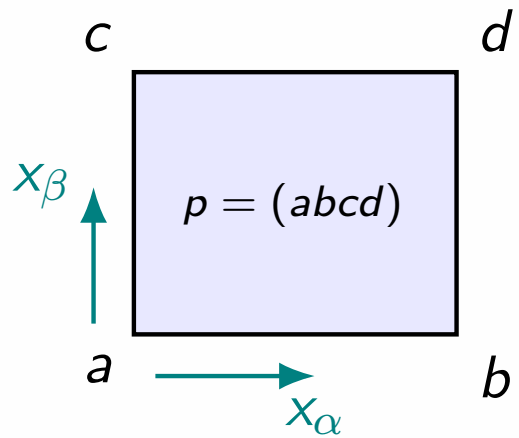

- $0 = (0,0,0),\ 1 = (1,0,0),\ 2 = (0,1,0),\ 3 = (0,0,1);$
  $4 = (1,1,1),\ 5 = (1,0,1),\ 6 = (1,1,0),\ 7 = (0,1,1).$
- Each oriented face uses local coordinates (x_α, x_β).

Backup: separating the bulk contribution

For the **proof**, introduce an auxiliary interpolation $S^L_{I,c}$ of the **bare gauge links**, and factorize the action interpolation:

$$S^L_c(x; g_1) = g_1(0)^\dagger \underbrace{S^L_{I,c}(x; U)}_{\text{pure gauge links}} \underbrace{g_{1,c}(x)}_{\text{bosonic extension}} .$$

The lattice transgression then separates into

$$\sum_c K^L_c[g_1, U] = -\underbrace{\Gamma_{\mathrm{WZ}}[g_1]}_{\text{WZ, mod } 2\pi} + \underbrace{K^L_\partial[g_1, U]}_{\text{boundary}} + \underbrace{\mathcal{C}^L[U]}_{\text{pure gauge bulk}} \pmod{2\pi}.$$

- $g_{1,c}$ glues across cubes: $e^{\mathrm{i}\Gamma_{\mathrm{WZ}}}$ is extension-independent.
- Interior face terms cancel between adjacent cubes.
- The only nontrivial bulk obstruction is $\mathcal{C}^L[U] - \mathcal{C}^R[U]$.

Backup: quadratic-index calculation

The auxiliary gauge interpolation is first chosen in the **same fundamental** $SU(N)$ **representation**, then mapped to R_L and R_R:

$$S_{I,c}^{L/R} = R_{L/R}(S_{I,c}), \quad (S_{I,c}^{L/R})^{-1}\partial_\mu S_{I,c}^{L/R} = \sum_a C_\mu^a \, t_{L/R}^a.$$

Only **quadratic traces** remain in the CS density; for the cubic part,

$$\mathrm{Tr}\big(t^a[t^b, t^c]\big) = \mathrm{i} f^{bcd}\,\mathrm{Tr}(t^a t^d).$$

Therefore,

$$\mathcal{C}^L[U] - \mathcal{C}^R[U] = \sum_{a,b} \mathcal{B}^{ab}[U]\,\big[\mathrm{Tr}(t_L^a t_L^b) - \mathrm{Tr}(t_R^a t_R^b)\big].$$